A bedroom poster

Project

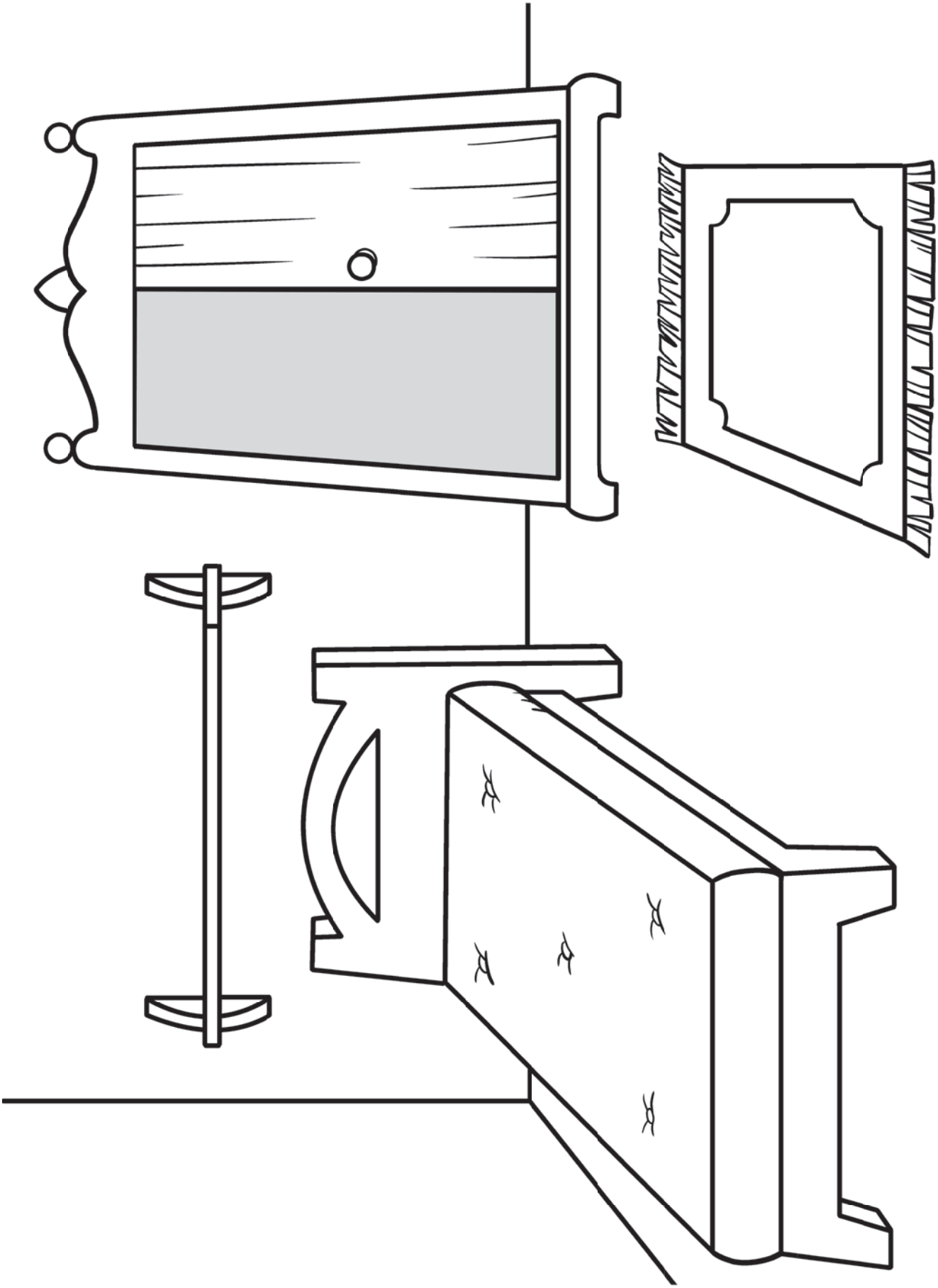

PHOTOCOPIABLE © Oxford University Press

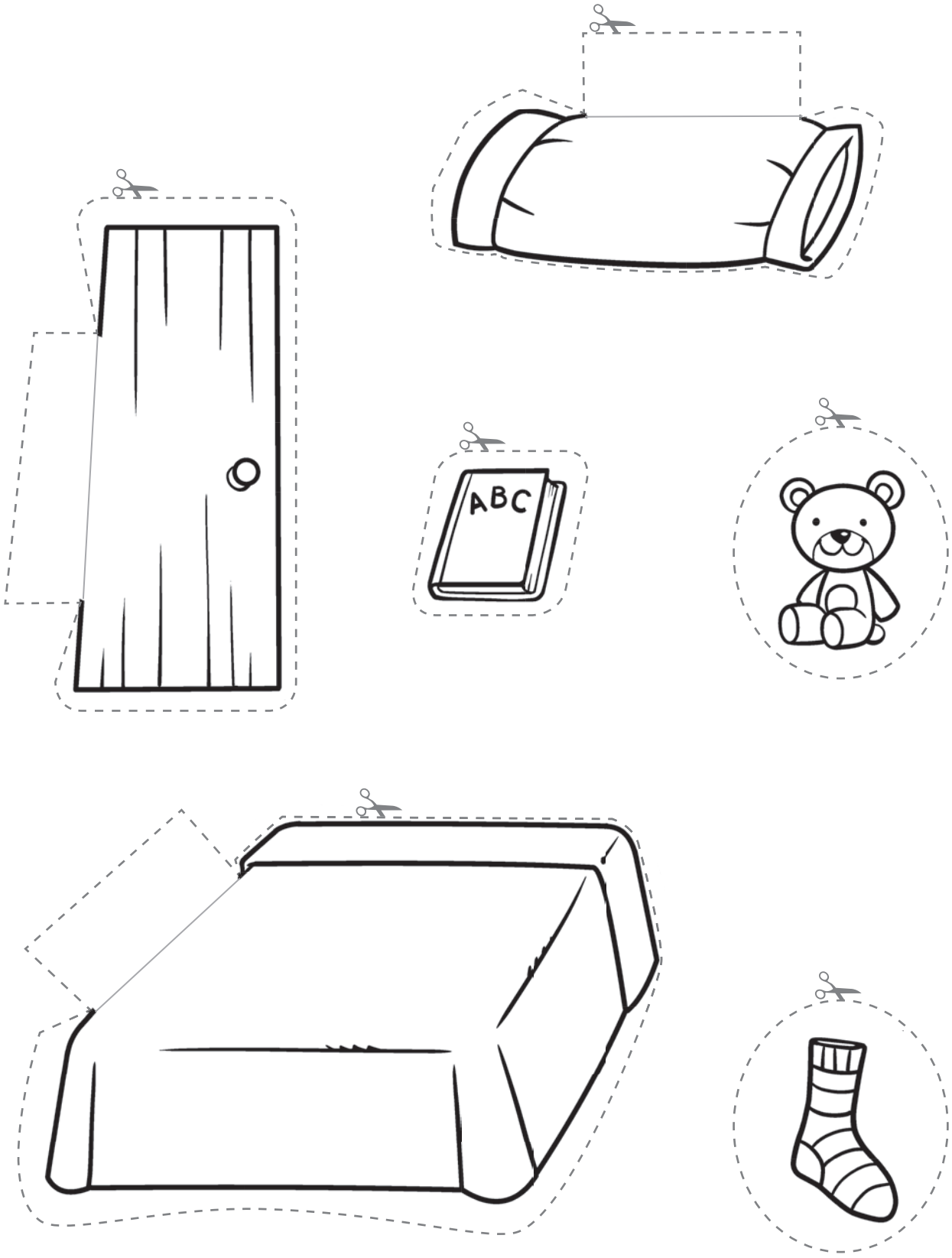

Cut
Fold

PHOTOCOPIABLE © Oxford University Press